OMRON

Portable Multi Logger

ZR-RX40

Start Up Guide

Cat. No. Z259-E1-03

Introduction

This manual provides information regarding functions, performance and operating methods that are required for using the ZR-RX40.
When using the ZR-RX40, be sure to observe the following:
· The ZR-RX40 must be operated by personnel knowledgeable in electrical engineering.
· To ensure correct use, please read this manual thoroughly to deepen your understanding of the product.
· Please keep this manual in a safe place so that it can be referred to whenever necessary.

Type of Manuals

The manuals of the ZR-RX40 series consist of the following.
Select the manual suitable for your purpose and read it before starting operation.

Manual packaged in the product (brochure)

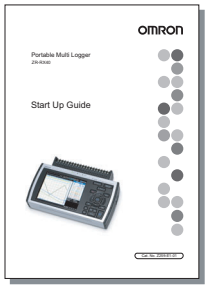

Start Up Guide (this manual)

The basic information to use the ZR-RX40 series is described, such as the information for safe and correct use, confirmation of the package, procedure from connection to measurement, and the information of functions and specifications of the ZR-RX40 series.

Manuals contained in the utility CD-ROM (pdf data)

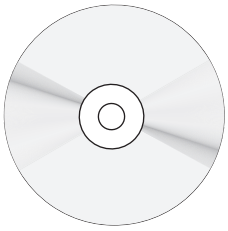

Software Manual

Information for installing PC software, basic operation, explanation of screen and setting methods is described.
Two PC software manuals are contained:
· Special PC software "Wave Inspire RX"
· Basic PC software "Smart Viewer RX40"

Start Up Guide

Same contents as the above referenced "Start Up Guide" packaged in the product.

User's Manual

· Information for safe and correct use
· Before use: connection and wiring in details, language change of display, etc.
· Procedure in details for setting and measurement
· Specifications of the ZR-RX40 series and accessories
· Other information which is required for the use of the ZR-RX40 series

Start Up Guide

Portable Multi Logger

ZR-RX40

READ AND UNDERSTAND THIS DOCUMENT

Please read and understand this document before using the products. Please consult your OMRON representative if you have any questions or comments.

WARRANTY

OMRON's exclusive warranty is that the products are free from defects in materials and workmanship for a period of one year (or other period if specified) from date of sale by OMRON.

OMRON MAKES NO WARRANTY OR REPRESENTATION, EXPRESS OR IMPLIED, REGARDING NON-INFRINGEMENT, MERCHANTABILITY, OR FITNESS FOR PARTICULAR PURPOSE OF THE PRODUCTS. ANY BUYER OR USER ACKNOWLEDGES THAT THE BUYER OR USER ALONE HAS DETERMINED THAT THE PRODUCTS WILL SUITABLY MEET THE REQUIREMENTS OF THEIR INTENDED USE. OMRON DISCLAIMS ALL OTHER WARRANTIES, EXPRESS OR IMPLIED.

LIMITATIONS OF LIABILITY

OMRON SHALL NOT BE RESPONSIBLE FOR SPECIAL, INDIRECT, OR CONSEQUENTIAL DAMAGES, LOSS OF PROFITS OR COMMERCIAL LOSS IN ANY WAY CONNECTED WITH THE PRODUCTS, WHETHER SUCH CLAIM IS BASED ON CONTRACT, WARRANTY, NEGLIGENCE, OR STRICT LIABILITY.

In no event shall responsibility of OMRON for any act exceed the individual price of the product on which liability is asserted.

IN NO EVENT SHALL OMRON BE RESPONSIBLE FOR WARRANTY, REPAIR, OR OTHER CLAIMS REGARDING THE PRODUCTS UNLESS OMRON'S ANALYSIS CONFIRMS THAT THE PRODUCTS WERE PROPERLY HANDLED, STORED, INSTALLED, AND MAINTAINED AND NOT SUBJECT TO CONTAMINATION, ABUSE, MISUSE, OR INAPPROPRIATE MODIFICATION OR REPAIR.

SUITABILITY FOR USE

THE PRODUCTS CONTAINED IN THIS DOCUMENT ARE NOT SAFETY RATED. THEY ARE NOT DESIGNED OR RATED FOR ENSURING SAFETY OF PERSONS, AND SHOULD NOT BE RELIED UPON AS A SAFETY COMPONENT OR PROTECTIVE DEVICE FOR SUCH PURPOSES.
Please refer to separate catalogs for OMRON's safety rated products.

OMRON shall not be responsible for conformity with any standards, codes, or regulations that apply to the combination of products in the customer's application or use of the product.

At the customer's request, OMRON will provide applicable third party certification documents identifying ratings and limitations of use that apply to the products. This information by itself is not sufficient for a complete determination of the suitability of the products in combination with the end product, machine, system, or other application or use.

The following are some examples of applications for which particular attention must be given. This is not intended to be an exhaustive list of all possible uses of the products, nor is it intended to imply that the uses listed may be suitable for the products:

- Outdoor use, uses involving potential chemical contamination or electrical interference, or conditions or uses not described in this document.

- Nuclear energy control systems, combustion systems, railroad systems, aviation systems, medical equipment, amusement machines, vehicles, safety equipment, and installations subject to separate industry or government regulations.
- Systems, machines, and equipment that could present a risk to life or property.

Please know and observe all prohibitions of use applicable to the products.

NEVER USE THE PRODUCTS FOR AN APPLICATION INVOLVING SERIOUS RISK TO LIFE OR PROPERTY WITHOUT ENSURING THAT THE SYSTEM AS A WHOLE HAS BEEN DESIGNED TO ADDRESS THE RISKS, AND THAT THE OMRON PRODUCT IS PROPERLY RATED AND INSTALLED FOR THE INTENDED USE WITHIN THE OVERALL EQUIPMENT OR SYSTEM.

PERFORMANCE DATA

Performance data given in this document is provided as a guide for the user in determining suitability and does not constitute a warranty. It may represent the result of OMRON's test conditions, and the users must correlate it to actual application requirements. Actual performance is subject to the OMRON Warranty and Limitations of Liability.

CHANGE IN SPECIFICATIONS

Product specifications and accessories may be changed at any time based on improvements and other reasons.

It is our practice to change model numbers when published ratings or features are changed, or when significant construction changes are made. However, some specifications of the product may be changed without any notice. When in doubt, special model numbers may be assigned to fix or establish key specifications for your application on your request. Please consult with your OMRON representative at any time to confirm actual specifications of purchased products.

DIMENSIONS AND WEIGHTS

Dimensions and weights are nominal and are not to be used for manufacturing purposes, even when tolerances are shown.

ERRORS AND OMISSIONS

The information in this document has been carefully checked and is believed to be accurate; however, no responsibility is assumed for clerical, typographical, or proofreading errors, or omissions.

PROGRAMMABLE PRODUCTS

OMRON shall not be responsible for the user's programming of a programmable product, or any consequence thereof.

COPYRIGHT AND COPY PERMISSION

■ Notice on European EMC Directive (2004/108/EC)

This product meets CISPR11 class A. The intended use of this product is in an industrial environment only.

■ Traceability Information

- Representative in EU

  Omron Europe B.V.

  Wegalaan 67-69

  2132 JD Hoofddorp,

  The Netherlands

- Manufacturer

  Omron Corporation,

  Sensing Devices & Components Div. H.Q.,

  Application Sensors Division

  Shiokoji Horikawa,

  Shimogyo-ku, Kyoto 600-8530 JAPAN

Meanings of Signal Words

The following signal words are used in this manual.

⚠ WARNING	Indicates a potentially hazardous situation which, if not avoided, will result in minor or moderate injury, or may result in serious injury or death. Additionally there may be significant property damage.
⚠ CAUTION	Indicates a potentially hazardous situation which, if not avoided, may result in minor or moderate injury or in property damage.

Meanings of Alert Symbols

The following alert symbols are used in this manual.

	Indicates the possibility of explosion under specific conditions.
	Indicates the possibility of electric shock under specific conditions.
	Indicates prohibition when there is a risk of minor injury from electrical shock or other source if the product is disassembled.
	Indicates general prohibitions for which there is no specific symbol.

Alert Statements in this Manual

The following alert statements apply to the products in this manual. Each alert statement also appears at the locations needed in this manual to attract your attention.

⚠ WARNING

This product cannot be used for directly or indirectly detecting human bodies to ensure safety.

Do not use this product as a human body protection device.

Serious hazard may occur in rare occasions due to ignition, rupture or combustion of the lithium battery contained in this product.

Never disassemble, deform under pressure, heat or incinerate this product.

⚠ CAUTION

Injuries from electric shock may occur in rare occasions as the result of disassembly.

Never disassemble, deform under pressure or incinerate the main unit.

Hazard may occur from serious fire or electric shock.

Do not connect voltages exceeding the rated voltage to the signal input terminals.

Fire or hazard may occur in rare occasions from ignition, rupture or combustion.

Do not use battery packs other than ZR-XRB1.

Precautions for Safe Use

Be sure to observe the following items as they are very important to ensure safety.

1.Installation environment

- Do not store or use in locations where the temperature exceeds the rated range.
- Do not use in locations where the relative humidity exceeds the 30 to 80 %RH range.
- Do not use in locations subject to steam.
- Do not use in flammable or explodable gas environment.

2.Power supply and wiring

- Do not connect voltages exceeding the rated voltage to signal cables.
- Be sure to check the polarity of the signals when connecting the signal cables.
- When using the battery pack, be sure to read the cautions on the battery pack carefully for correct usage.
- Be sure to use only the specified battery pack.
- Be sure to use only the AC cable and the AC adapter provided as standard accessories.
- Do not connect power supplies exceeding the rated voltage to the AC adapter.
- Be sure to turn off the power supply when connecting to the input terminals.
- Do not touch the input terminals during measurement.

3.Others

- Dispose of this product as industrial waste.
- If there are any troubles, stop usage immediately, turn off the power supply and contact OMRON branch or sales office.

Precautions for Correct Use

Please observe the following precautions to prevent inoperability, misoperation of the product or negative effects on the performance and the device.

1.Installation Location

Do not install this product in the following locations.

- Locations where the temperature exceeds the rated range
- Locations where severe changes in temperature occur (where condensation occurs)
- Locations subject to corrosive or flammable gases
- Locations subject to dust, salt or iron powder
- Locations subject to direct shock or vibration
- Locations subject to direct sunlight or near heating devices
- Locations where water, oil or chemical products may be splashed
- Locations subject to strong magnetic fields or strong electric fields

2.Power supply, connecting and wiring

- The cables should be wired apart from high-tension or power lines.
  Malfunction or damage may occur due to induction.
- After wiring, check the adequacy of power supply voltage, miswiring such as overvoltage/load short-circuiting and adequacy of load current before turning on the power supply.
  Malfunction may occur due to miswiring and such.
- Always turn off the power supply when attaching or removing peripheral devices.
  Attaching or removing of peripheral devices with the power supply on can cause malfunction or data corruption.

3.Installation

- Do not cover the vent hole when using this product.
  Leave at least 30cm of installation space around this product.
  The generated heat may cause malfunction or damage.
- When measuring temperature, install the product so that the input terminals are not subject to severe changes in temperature by wind or sunlight.
  It may cause calculation errors.
- Do not install this product in a slanted or vertical position.
- Connect the GND terminal for safe measurement. This product must also be grounded when sharing a common ground level with other devices.

4.Warm up

- For stable measurement, wait at least 30 minutes after turning on the power supply before using.

5.Handling

- Be sure to take backups of captured data in your PC. The captured content may be altered or lost due to misuse or malfunctions during usage.
- Do not drop or apply strong impact or force to the product.
  It may cause malfunction of the monitor or the main unit.

6.Maintenance

- Do not use thinner, benzine, acetone or kerosene to clean this product.
- Calibration should be performed periodically to maintain measurement accuracy.

Checking the Accessories

Item	Remarks	Quantity
Main unit	ZR-RX40	1
Start Up Guide	This manual	1
Utility disk	● Specal PC software “Wave Inspire RX“ (tryout) ● Basic PC software “Smart Viewer RX40” ● Start Up Guide PDF files ● User's Manual PDF files ● “Wave Inspire RX“ Software Manual PDF files ● “Smart Viewer RX40” Software Manual PDF files	1
AC cable/AC adapter	100 to 240 VAC, 50/60 Hz	1

Editor's Note

■ Meaning of Symbols

Menu items that are displayed on the ZR-RX40's LCD screen, and windows, dialog boxes and other GUI elements displayed on the PC are indicated enclosed by brackets "[ ]".

■ Visual Aids

Important	Indicates points that are important to achieve the full product performance, such as operational precautions.
Note	Indicates application procedures.
	Indicates pages where related information can be found.

CONTENTS

1.BEFORE USE

2.BASIC OPERATIONS

3.SPECIFICATIONS

MEMO

BEFORE USE

Part Names

Top Panel

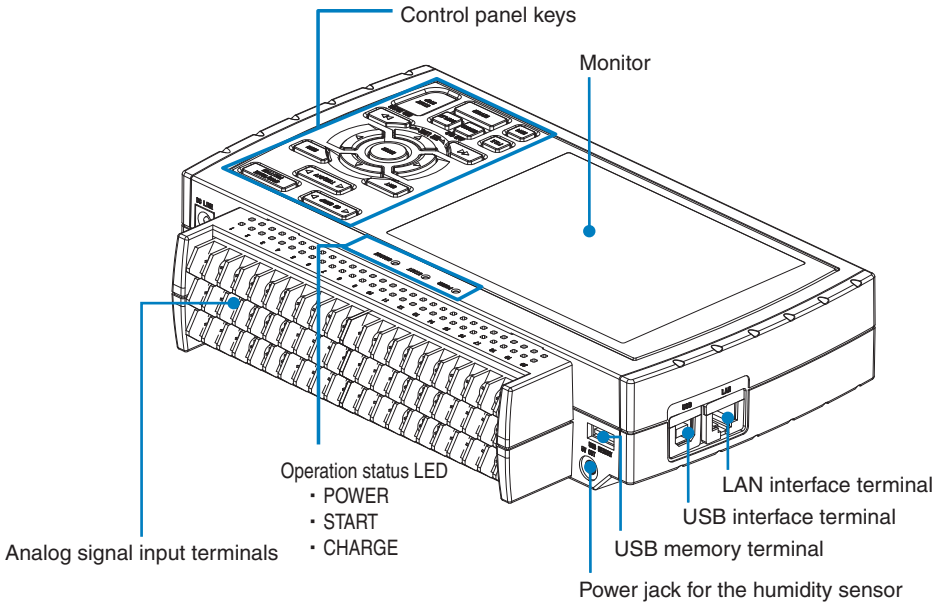

Bottom Panel

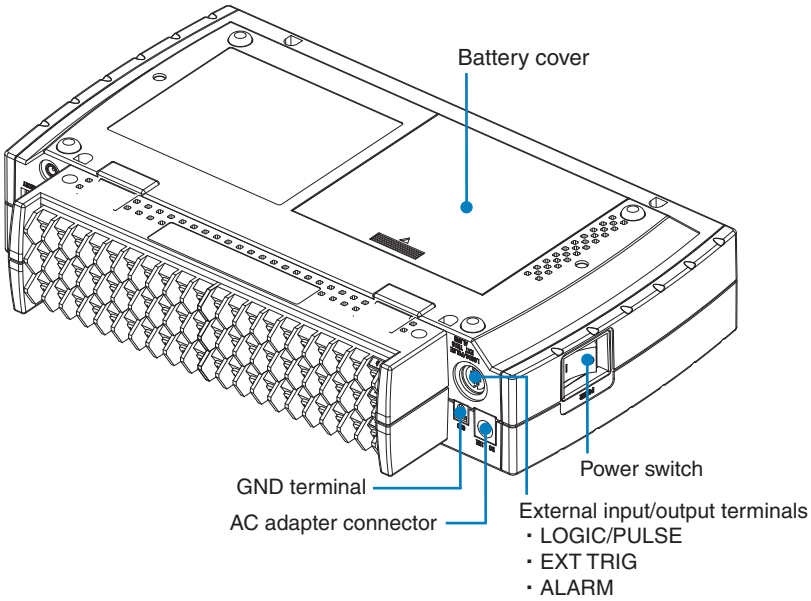

Connection Procedures

Connecting the AC Adapter

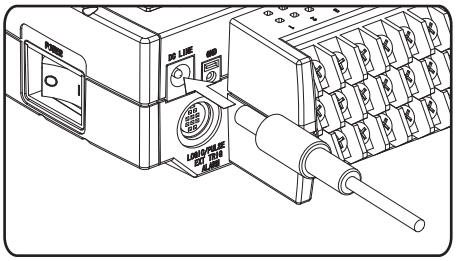

Connect the output side of the AC adapter to the AC adapter connector on the ZR-RX40.

Important

Be sure to use only the AC cable and the AC adapter provided as standard accessories.

Connecting the Grounding Cable

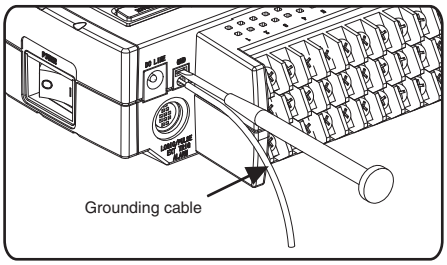

Use a flathead screwdriver to push the button above the ground terminal while connecting the grounding cable to the ZR-RX40. Connect the other end of the cable to ground.

Important

Connect the GND terminal for safe measurement. The ZR-RX40 must also be grounded when sharing a common ground level with other devices.

Note

The grounding cable is not provided as a standard accessory and must be prepared separately.
[Recommended Cord Diameter: AWG18/UL1007]

Making Connections to the Analog Input Terminals

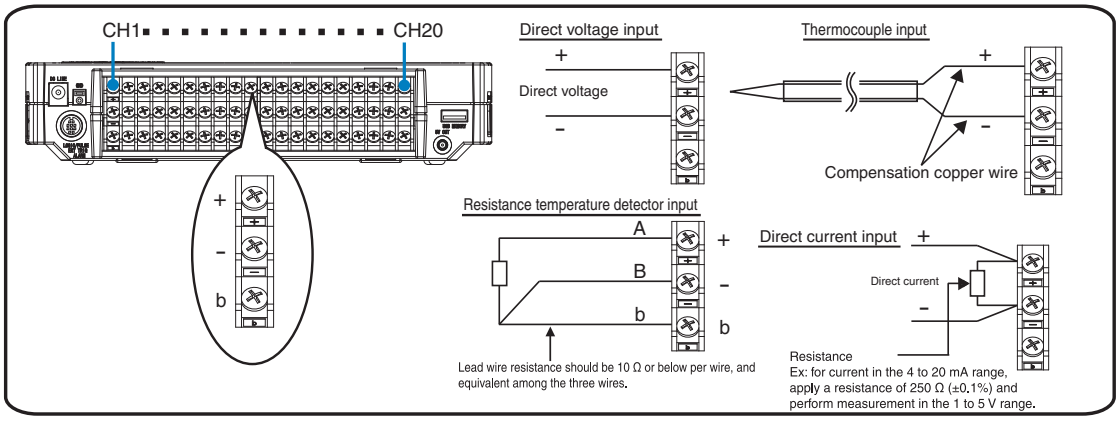

Making Connections to the External Input/Output Terminals (Using ZR-XRL1)

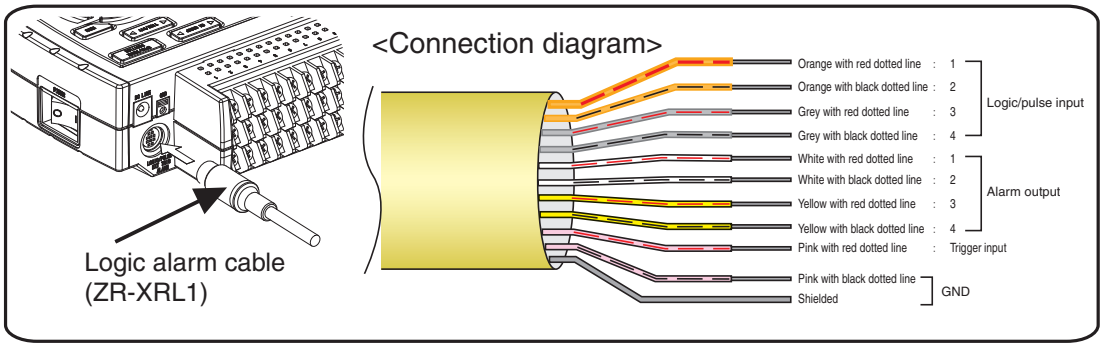

Note

Logic alarm cable (sold separately: ZR-XRL1) is required.

Attaching USB Memory Device

You're able to store measured data directly to the USB memory device.

Attach the USB memory to the USB memory terminal.

Note

<Specifications of supported USB memory device>

- Power source : +5 V
- Power consumption : 250 mA or below
- Capacity : No limit (except each file must be within 2 GB)

USB memory device with security functions such as fingerprint authentication cannot be used.

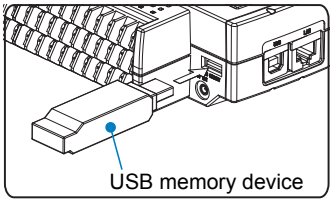

Connecting to a PC

Use the USB, LAN Interface to connect the ZR-RX40 to a PC.

Connection Using a USB Cable

Use the USB, to connect the ZR-RX40 to a PC.

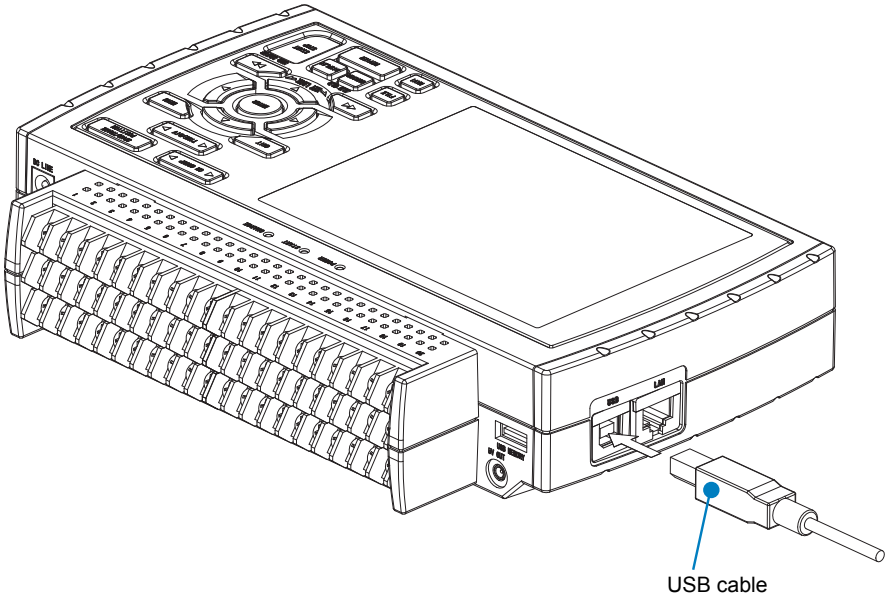

Note

If the USB cable is used, install the USB driver in your PC.

"Installing the USB driver" in the Software Manual

LAN Connection

Use a LAN cable to connect the ZR-RX40 to a PC.

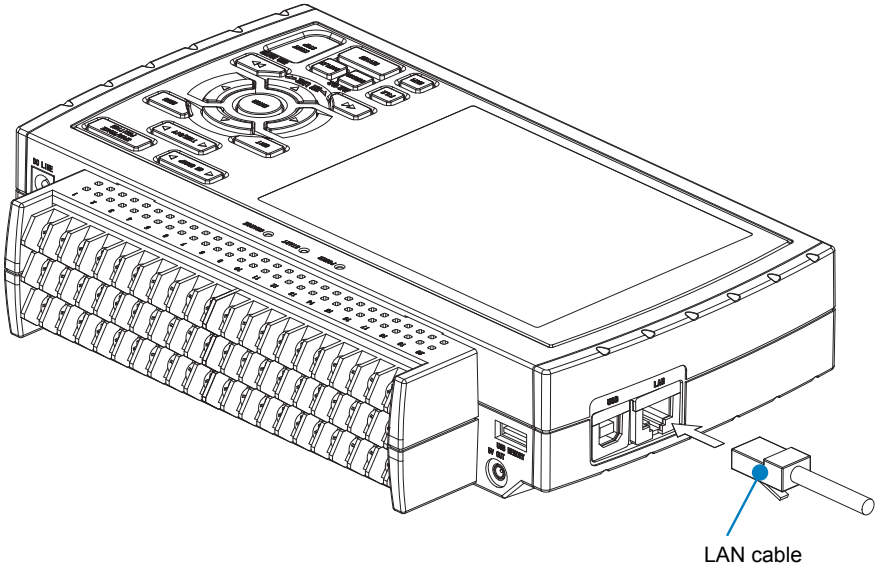

Cable Types

- Use a crossing cable when connecting directly to a PC, without using a hub.

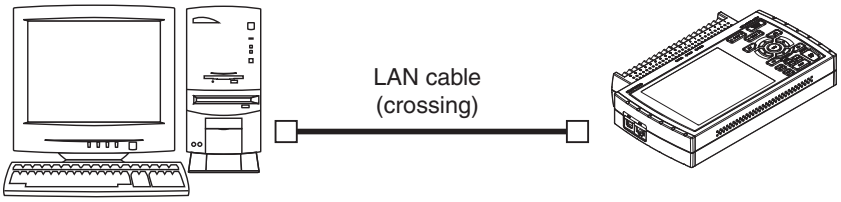

- Use a straight cable when using a hub.

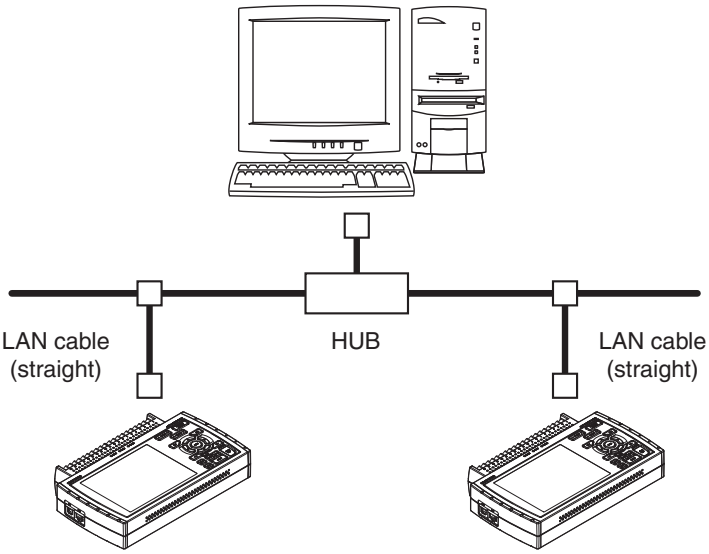

Mounting and Removing the Terminal Unit

Remove and mount terminal unit as shown below.

Important

Make sure the ZR-RX40's power is OFF when removing or mounting terminal units.

To Remove

Pull the terminal unit out towards the direction indicated by the arrow while pressing the two locks at the bottom of the unit.

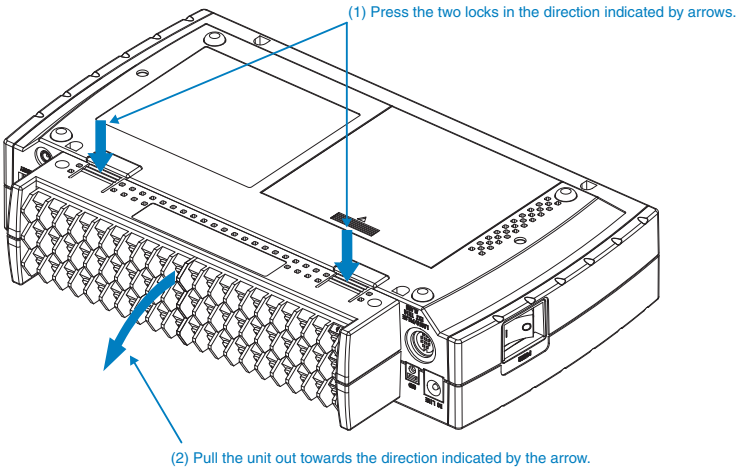

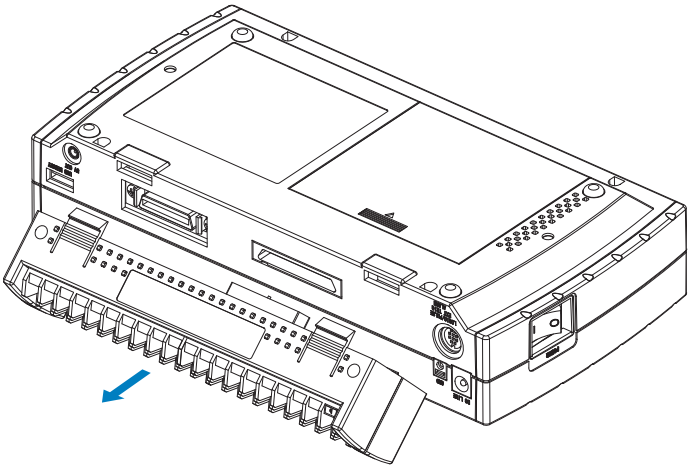

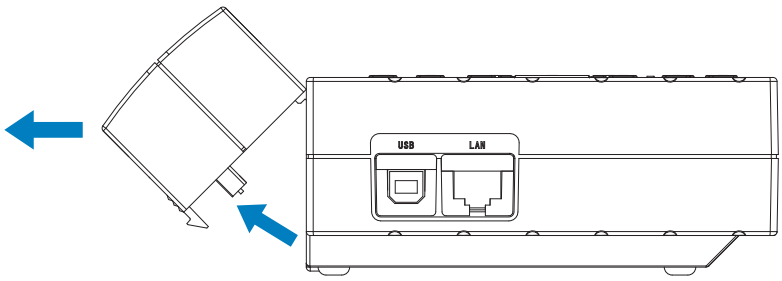

To Mount

Insert the tabs at the top of the terminal unit into the slots of the ZR-RX40, and push in the unit until the lock tabs at the bottom of the unit are securely locked.

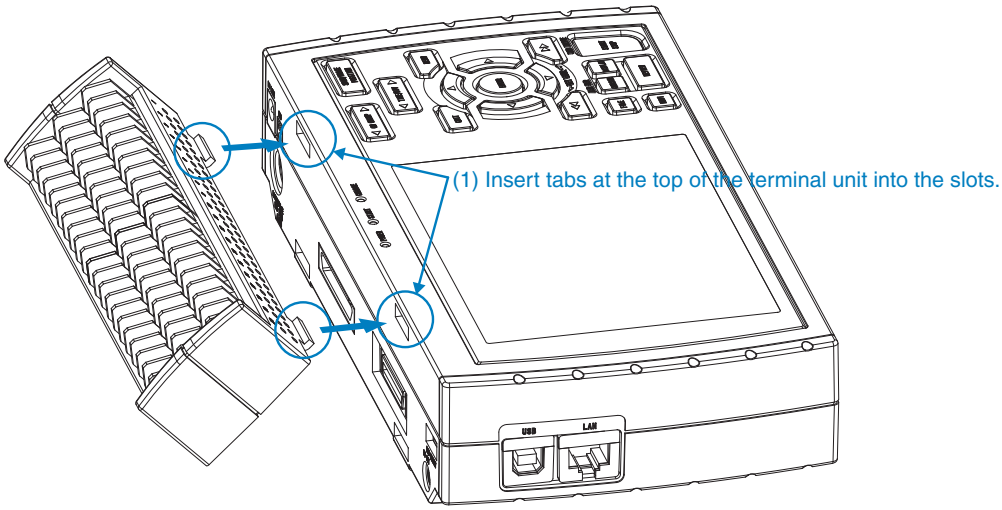

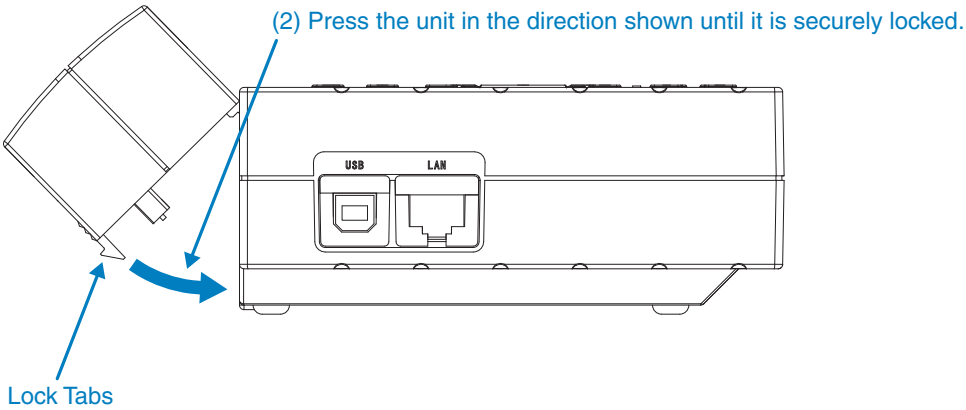

Unused channels

Capacitors have been incorporated into the analog input circuit to increase the noise elimination capability.

Therefore, if input terminal is open, or signals are not input to the terminal, measured results may be influenced by signals from other channels. In such a case, set input setting to “Off” or short circuit the + and – terminals.

If signals are input correctly, measured results are not influenced by other channels.

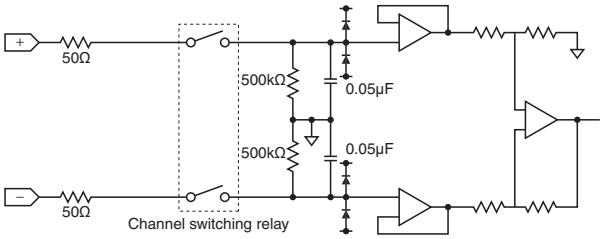

Noise countermeasures

If measured values fluctuate due to extraneous noise, conduct the following countermeasures.

(Results may differ according to noise type.)

Connect the ZR-RX40’s GND to ground.

Connect ZR-RX40’s GND to measurement object's GND.

Measure using batteries (sold separately: ZR-XRB1). Battery pack ZR-XRB1 (Option) is required.

In the AMP settings menu, filter is used.

Set the sampling interval which enables ZR-RX40’s digital filter (see table below).

Number of Measuring Channels*	Sampling Interval which enables Digital Filter
10 channels or less	500 msec or above
11 to 20 channels	1 sec or above
21 to 50 channels	2 sec or above
51 to 100 channels	5 sec or above
101 to 200 channels	10 sec or above

*“Number of Measuring Channels” is the number of channels in which input settings are NOT set to “OFF”.

Setting the Date and Time

The ZR-RX40 includes a rechargeable internal battery for backup.

If you are using the ZR-RX40 for the first time, charge the internal rechargeable battery and then make the date and time settings.

Note

If the ZR-RX40 is not used for a period of approximately six months, the internal rechargeable battery may be discharged and the date and time may revert to the initial settings. If this happens, recharge the battery before using the ZR-RX40.

How to Recharge the Rechargeable Battery

Using the AC adapter provided, connect the ZR-RX40 to a mains power outlet, turn on the power switch, and then leave the ZR-RX40 connected for at least 24 hours.

How to Set the Date and Time

Press the MENU key, display the [OTHR] screen, and then set the date and time at the Date/Time Settings sub-menu.

"Setting the Date and Time" Section in the User's manual

Descriptions of the Control Panel Keys

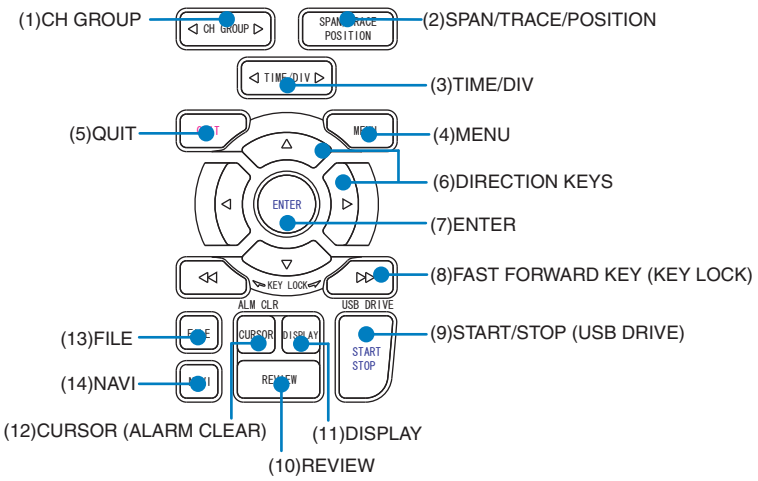

❶ CH GROUP key

Press this key to switch to the next group consisting of 10 channels.
Press the ◁ side to switch to the group consisting of the next 10 channels with a smaller number.
Press the ▷ side to switch to the group consisting of the next 10 channels with a larger number.

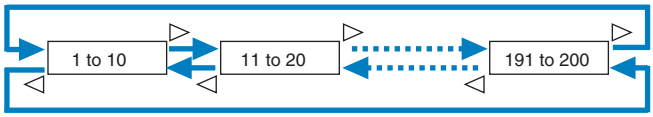

❷ SPAN/TRACE/POSITION key

This key enables SPAN, POSITION, and TRACE settings to be made independently for each channel. Each time this key is pressed, the mode displayed in the waveform operation display area changes in the sequence shown below. Use the △ and ▽ keys to select the channel, and the ◁ and ▷ keys to change the setting values.

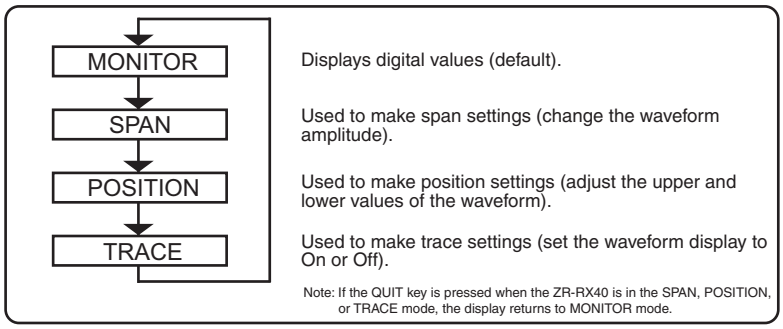

❸ TIME/DIV key

Press the TIME/DIV key to change the time axis display range on the waveform screen.

❹ MENU key

Press the MENU key to open a setup menu. Each time this key is pressed, the setup screen tabs change in the sequence shown below.

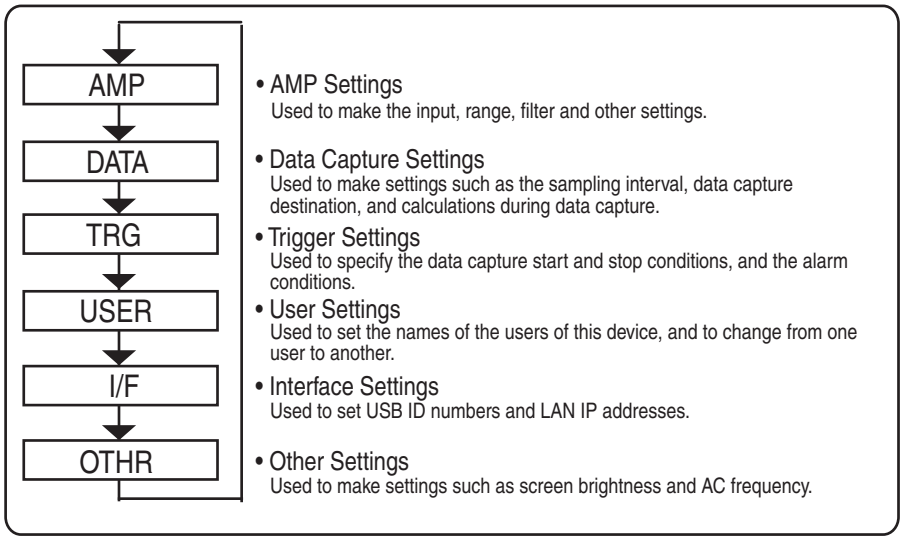

❺ QUIT (LOCAL) key

Press the QUIT key to cancel the settings and return them to their default status. If the device is in the Remote (Key Lock) status, namely the external operating status via the interface, press this key to return the device to the normal operating status (Local).

❻ ▽△ ◁▷ keys (DIRECTION KEYS) key

These keys are used to select menu setup items, to make span settings in the digital display area, to move the cursors during a data replay operation, and so forth.

❼ ENTER key

Press the ENTER key to enter the settings made in the setup menus, and to confirm your settings.

❽ ◁◁ ▷▷ keys (KEY LOCK)

These keys are used to move the cursor at high speed during a data replay operation, and to change the operation mode in the file settings box. Hold down both keys simultaneously for at least two seconds to enable key lock status. To cancel key lock status, press them again for at least two seconds. The key lock status can be confirmed by the status of the key lock lamp on the monitor.

❾ START/STOP (USB DRIVE) key

Press the START/STOP key to perform a data capture start operation while the ZR-RX40 is in the Free Running status, and a data capture stop operation when data capture has ended. If this key is held down while the power to the ZR-RX40 is turned on, the ZR-RX40 goes into USB Drive Mode.

❿ REVIEW key

Press the REVIEW key to perform a data capture start operation while the ZR-RX40 is in the Free Running status, and a data capture stop operation when data capture has ended. If this key is held down Note: while the power to the ZR-RX40 is turned on, the ZR-RX40 goes into USB Drive Mode.

A data replay operation will not be performed if data has not been captured.

⓫ DISPLAY key
This key is used to switch the window mode.

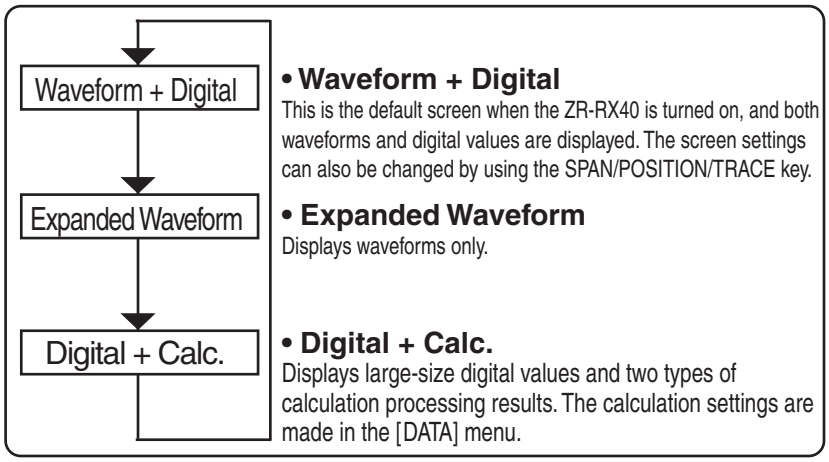

⓬ CURSOR (ALM CLR) key
Press the CURSOR key to switch between the A and B cursors during a data replay operation. If the Alarm setting has been specified as "Alarm Hold", press this key to clear the alarm. The alarm settings are made in the [TRIG] menu.

⓭ FILE key
Press the FILE key to save data to the ZR-RX40's internal memory and to a USB memory device.

⓮ NAVI key
Press the NAVI key to display operational descriptions during the Free Running status, and during data capture and data replay operations.

Descriptions of the Menu Screens

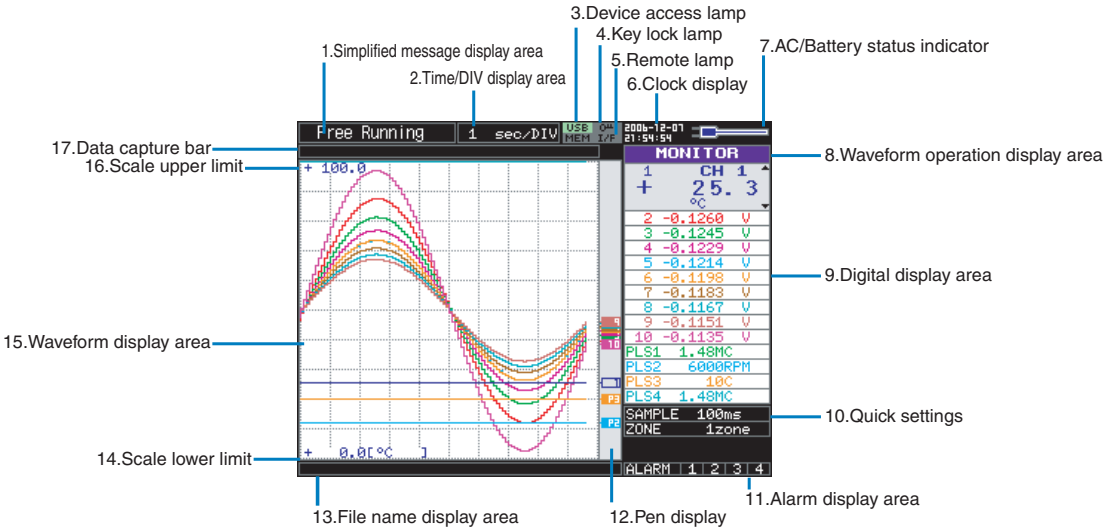

Item	Description
(1) Simplified message display area	Displays the operating status.
(2) Time/DIV display area	Displays the current time scale.
(3) Device access lamp	Turns red when USB memory is accessed. When the ZR-RX40's internal memory is being accessed, the MEM lamp turns red.
(4) Key lock lamp	Displays the key lock status. (Yellow = keys locked, white = not locked)
(5) Remote lamp	Displays the remote status. (Yellow = Remote status, white = Local status)
(6) Clock display	Displays the current date and time.
(7) AC/Battery status indicator	Displays the following icons to indicate the operating status of the AC power supply and the battery. 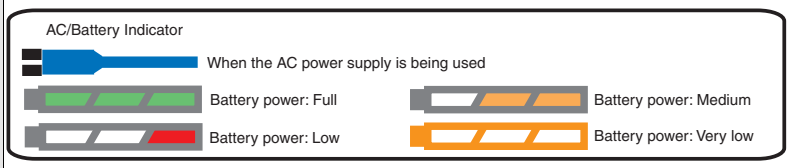
(8) Waveform operation display area	Displays the mode selected by the SPAN/POSITION/TRACE key.
(9) Digital display area	Displays the input values for each channel. The △ and ▽ keys can be used to select the active channel (enlarged display). Moreover, the selected active channel is displayed at the very top of the waveform display.
(10) Quick settings	Displays items that can be easily set. The △ and ▽ keys can be used to make a Quick settings item active, and the ◁ and ▷ keys to change the values.
(11) Alarm display area	Displays the status of the alarm output terminal. (Red = alarm generated, white = alarm not generated)

Item	Description
(12) Pen display	Displays the signal positions, trigger positions, and alarm ranges for each channel. 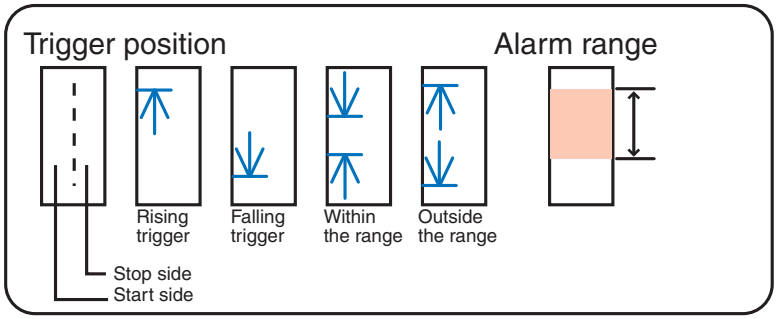
(13) File name display area	Displays the data capture file name during the data capture operation. During a data replay operation, the name of the data replay file is displayed.
(14) Scale lower limit	Displays the lower limit of the scale of the currently active channel.
(15) Waveform display area	The input signal waveforms are displayed here.
(16) Scale upper limit	Displays the upper limit of the scale of the currently active channel.
(17) Data capture bar	During a data capture operation, this bar displays the remaining memory capacity of the device used for data capture. When data is being replayed, the display position information is displayed here.

MEMO

BASIC OPERATIONS

Measurement Procedure

In this section we will provide a simple explanation of the data capture procedure: Preparations → Setup → Data Capture → Data Replay.

T thermocouples will be used here to perform temperature measurement.

Purpose of data capture	To measure the temperature of the target objects
Measurement points	2 locations
Sampling interval	1 second
Data save destination	USB memory device
Important point	We want to check captured data even during a data capture operation.
Items that must be supplied	T thermocouples, USB memory device Note: If you do not have a USB memory device, capture data to the ZR-RX40's internal memory instead.

1. Preparations: Preparations for Data Capture

1 **Connect the thermocouple to measurement object 1 and the CH 1 terminal.**

2 **Connect the thermocouple to measurement object 2 and the CH 2 terminal.**

3 **Connect the AC adapter.**

4 **Insert the USB memory device.**

5 **Turn on the power supply.**

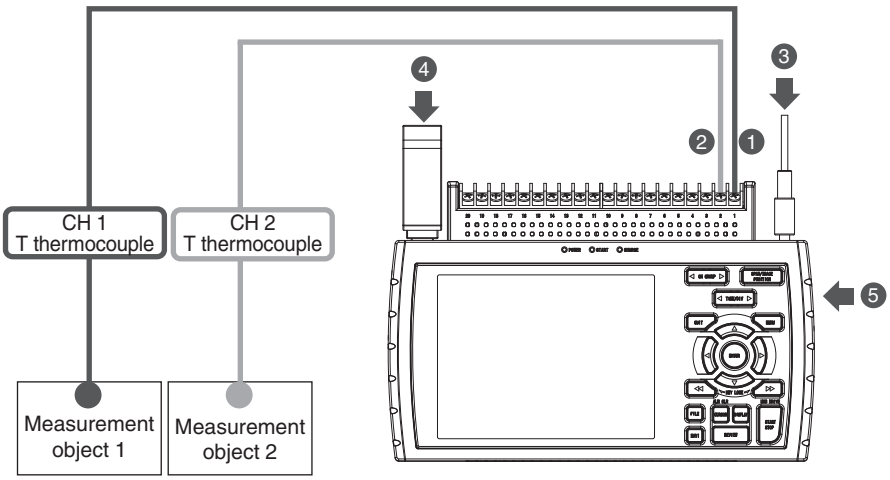

2. Setup: Setting the Temperature Measurement

Make the settings required for data capture. Here we will make only those settings that are absolutely necessary. The other settings will be left as the default settings (the settings made prior to shipment from the factory)

Note **Basic Setup Menu Operation**

The keys used on the menu screens are the ▽△◁▷ keys, the ENTER key, and the QUIT key. The current cursor position is displayed in blue. Use the ▽△◁▷ keys to move the cursor. If you press the ENTER key at the cursor position, a selection menu or a box for inputting numeric values and so forth is displayed. If you press the QUIT key, the screen closes and the ettings are canceled.

Examples of selection menu operations (AMP screen)

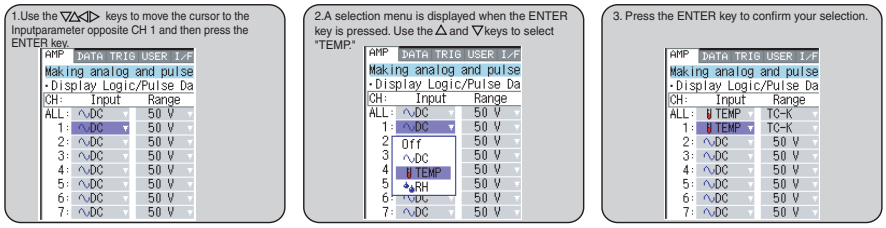

Note: For voltage measurement, select "DC".

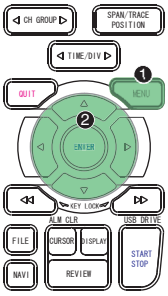

1 **Press the MENU key to display the setup menu screen.**

2 **Select [TEMP.] for the Input parameter for CH 1 and CH 2.**

(a) Move the cursor to the [Input] parameter opposite CH 1 and select [TEMP.]

(b) Make the same setting for CH 2.

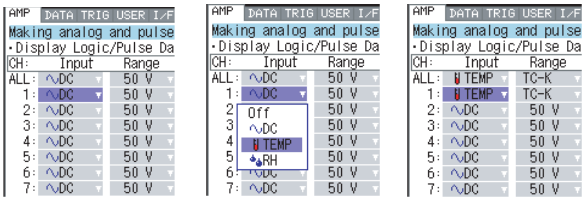

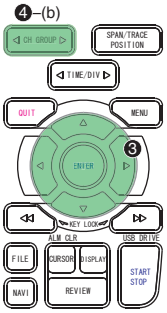

3 Select [TC-T] for the [Range] parameter for CH 1 and CH 2.

(a) Move the cursor to the [Range] parameter opposite CH 1 and select [TC-T].

(b) Make the same setting for CH2.

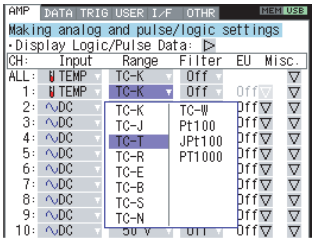

4 Select "Off" for all the other channels.

(a) Using the procedure described above, select [Off] for CH 3 to CH 10.

(b) Use the CH GROUP key to switch to the CH11 to CH20 group.

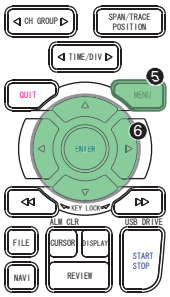

5 Press the MENU key and open the [DATA] menu.

6 Set the sampling interval to [1s].

Move the cursor to [Sampling] and then select [1s].

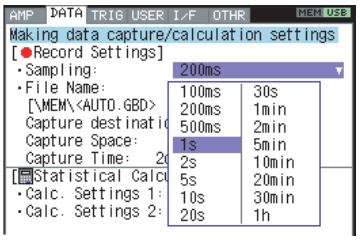

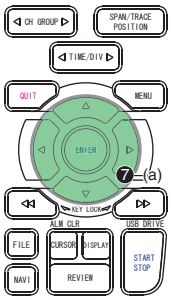

7 Specify the Capture Destination file name.

Here we will create a folder named [TEST] in the USB memory device, and then make the settings required to enable data to be captured to the TEST folder.

(a) Move the cursor to the File Name parameter and then press the ENTER key.

(b) With the cursor on the [<MEM>] item in the following screen, press the ENTER key.

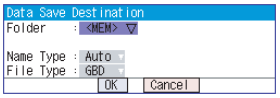

(c) The file settings box shown in the following screen opens.
This box is used to specify file names for the ZR-RX40's internal memory and for the USB memory device.

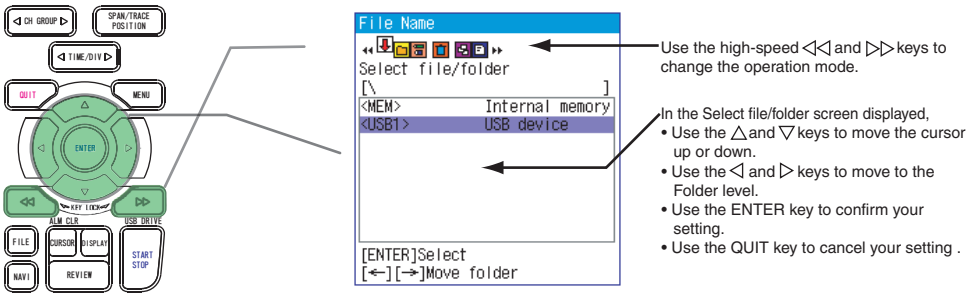

(d) Move the cursor to [<USB>] and then press the ▷ key.

(e) Press the ▷▷ key to move the cursor to [Create new folder] and then press the ENTER key.

(f) A text input box is displayed. Let's create a folder named "TEST".

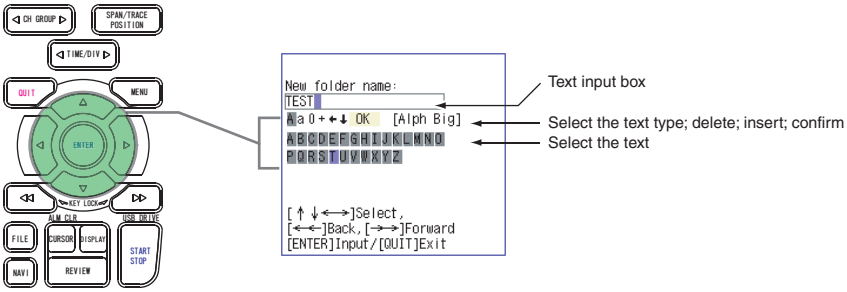

(g) Input "TEST", move the cursor to "OK", and then press the ENTER key to confirm your setting.

(h) As shown in the following screen, a folder named "<TEST>" has been created.
Press the ◁◁ key to move the cursor to [Select file/folder] and use the △▽ keys to select the "<TEST>" folder, and then press the ENTER key.

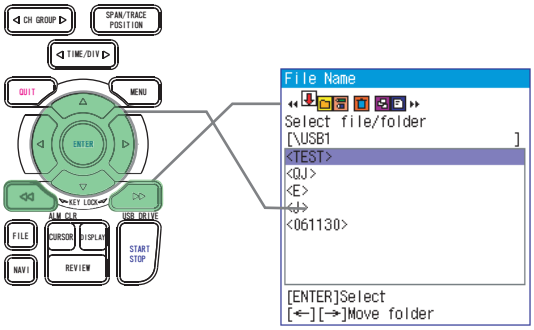

(i) Check that "<TEST>" appears opposite "Folder", move the cursor to the [OK] button, and then press the ENTER key.

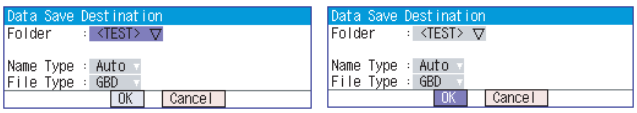

(j) In the screen displayed below, we can check the capture destination, the amount of data that can be captured, and the allowable data capture time.

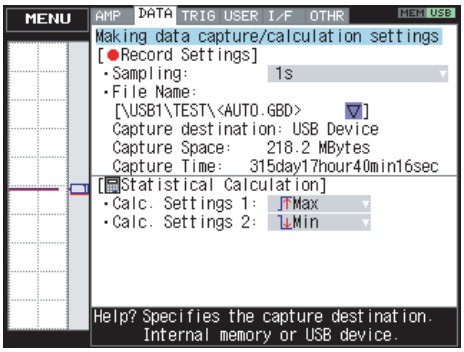

This completes all the settings required for data capture.

3. Data Capture: Measuring the Temperature

During the data capture operation, let's also replay some data that was captured previously. You can replay some data that was captured previously to check the data.

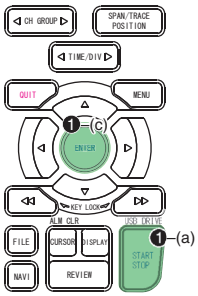

1 Starting data capture

(a) Press the START/STOP key.

(b) A confirmation message is displayed.

Start recording ?

[ENTER]Yes [QUIT]No

(c) Press the ENTER key to start data capture.

2 Screen status during data capture

Once data capture has started, the elapsed time and the allowable data capture time are counted.

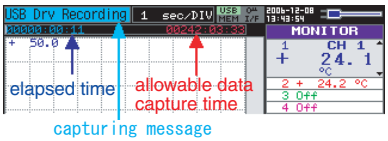

3 Replaying data being captured

Data that was captured in the past can be replayed while new data is being captured to the ZR-RX40. In addition, the past data can be compared with the current input waveform in a 2-screen format.

(a) Press the REVIEW key to display the data in a 2-screen format.

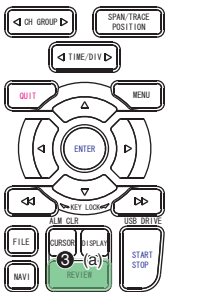

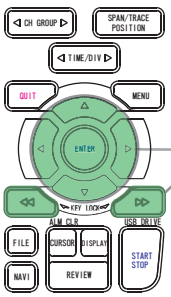

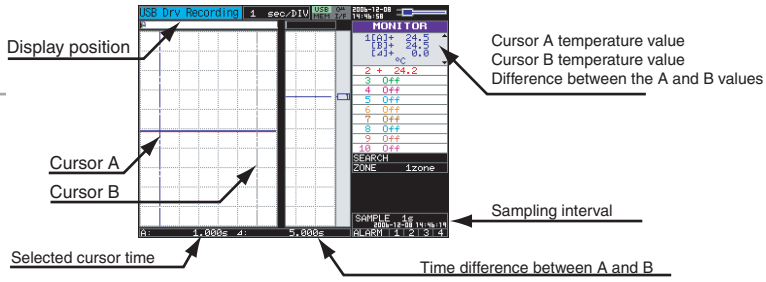

<Main operations>

- Use the ◁ and ▷ keys to move the cursor
- Use the ◁◁ and ▷▷ keys to move the cursor at high speed
- Use the CURSOR key to change your cursor selection (A→B→A)

(b) Move the cursor to check the captured waveforms, date/time, and so forth.

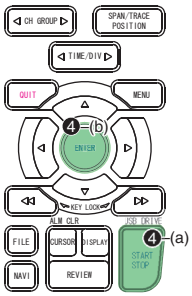

4 Stopping data capture

Press the START/STOP key to end the data capture operation.

(a) Press the START/STOP key.

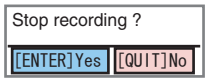

(b) A confirmation message is displayed. Press the ENTER key.

(c) Data capture ends, and the ZR-RX40 goes into the Free Running status.

This completes the data capture operation.

4. Data Replay: Replaying Captured Data

You can replay and check the captured data.
The data has been captured to the <TEST> folder that was created in the USB memory device in Step 7 of Section 2, "Setup". The file name is appended automatically, and therefore the name of the file that was created is "Year/month/date-time_UG.gbd". The year/month/date and time are those that were in effect when data capture started.

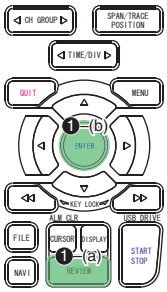

1 Selecting a file to replay

(a) Press the REVIEW key.

(b) Since the file you want to replay has the file name that was appended automatically when the data was captured, move the cursor to the [OK] button and then press the ENTER key.

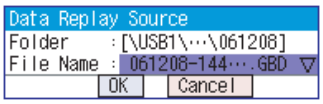

(c) The Replay screen opens.

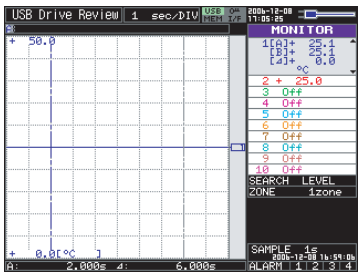

(d) Move the cursor to check the captured waveforms, date/time, and so forth. The SPAN/POSITION/TRACE key can also be used in the Replay screen to change the span, position trace, zone and other displayed settings.

(e) Press the QUIT key to end the data replay operation. A confirmation message is displayed. Press the ENTER key.

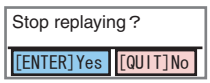

(f) Data replay ends, and the ZR-RX40 goes into the Free Running status.

The above shows the basic ZR-RX40 operations.

Convenient Functions

The ZR-RX40 is provided with various functions that enable it to be used more effectively.

For further details on functions and operation procedures, please refer to the User's Manual.

Trigger Functions

Trigger functions can be used to control the timing of the start of a data capture operation, and the timing of the end of a data capture operation.

Note

For example...
You can use trigger functions to perform operations such as the following:
- Start data capture when the voltage exceeds 1 V
- Stop data capture at 1:00 pm
- Perform control via external input

Span, Position and Trace Functions

These functions enable you to make adjustments in order to view individual channels more easily, and to delete waveforms that you do not need to view.

Note

The span, position and trace operations can be performed while the ZR-RX40 is in the Free Running status, while it capturing data, and while it is replaying data. The changes made are applied to the displayed data only, and so the original data is not affected in any way.

MEMO

SPECIFICATIONS

Standard Specifications

Main unit specifications				ZR-RX40A	
Analog input section	Input method			Photo MOS relay scanning system, all channels isolated, balanced input	
	Input terminal shape			M3 screw type terminal	
	Number of input channels			Standard: 20 ch Max: 200 ch (When the terminal unit is connected)	
	Scan speed			100 ms/10 ch max.	
	A/D resolution			16-bit	
	Measurement ranges	Voltage		20, 50, 100, 200, 500 mV; 1, 2, 5, 10, 20, 50 V; 1-5 V F.S.	
		Temperature		Thermocouples: K, J, E, T, R, S, B, N, W (WRe5-26) Resistance temperature detector: Pt100, JPt100, Pt1000 (IEC751)	
		Humidity (*1)		0 to 100 % (Voltage 0 to 1 V scaling conversion)	
	Measurement accuracy (*2) (*3)	Voltage		±0.1 % of F.S.	
		Thermocouple	Type	Measurement Temperature Range (°C)	Measurement Accuracy
			R/S	0 ≤TS ≤100	±5.2 °C
				100 < TS ≤300	±3.0 °C
				R: 300 < TS ≤1600	±(0.05 % of rdg +2.0 °C)
				S: 300 < TS ≤1760	±(0.05 % of rdg +2.0 °C)
			B	400 ≤TS ≤600	±3.5 °C
				600 < TS ≤1820	±(0.05 % of rdg +2.0 °C)
			K	–200 ≤TS ≤–100	±(0.05 % of rdg +2.0 °C)
				–100 < TS ≤1370	±(0.05 % of rdg +1.0 °C)
			E	–200 ≤TS ≤–100	±(0.05 % of rdg +2.0 °C)
				–100 < TS ≤800	±(0.05 % of rdg +1.0 °C)
			T	–200 ≤TS ≤–100	±(0.1 % of rdg +1.5 °C)
				–100 < TS ≤400	±(0.1 % of rdg +0.5 °C)
			J	–200 ≤TS ≤–100	±2.7 °C
				–100 < TS ≤100	±1.7 °C
				100 < TS ≤1100	±(0.05 % of rdg +1.0 °C)
			N	0 ≤TS ≤1300	±(0.1 % of rdg +1.0 °C)
			W	0 ≤TS ≤2315	±(0.1 % of rdg +1.5 °C)
			Reference contact compensation accuracy	±0.5 °C	

Main unit specifications				ZR-RX40A		
Analog input section	Measurement accuracy (*2) (*3)	Resistance temperature detector	Type	Measurement Temperature Range (°C)	Applied current	Measurement Accuracy
			Pt100	–200 to 850 (FS = 1050 °C)	1 mA	±1.0 °C
			JPt100	–200 to 500 (FS = 700 °C)	1 mA	±0.8 °C
			Pt1000	–200 to 500 (FS = 700 °C)	0.2 mA	±0.8 °C
	Maximum input voltage			60 Vp-p (between +/– terminals, between input terminals, between input terminal/GND)		
	Reference contact compensation			Internal/External switching		
	Input impedance			1 MΩ ±5 %		
	Allowable signal source resistance			300 Ω or less		
	Temperature coefficient			Gain: 0.01 % of F.S./°C		
	Withstand voltage			350 Vp-p (between input channel/GND; between each channel) 1 minute		
	Insulation resistance			Between input terminal/GND: At least 50 MΩ (at 500 VDC)		
External Input/ Output Sections	Logic input/ Pulse input	Number of channels (*4)		4 ch		
		Pulse input modes	Revolutions mode	Spans	50, 500, 5000, 50 k, 500 k, 5 M, 50 M, 500 M RPM/F.S.	
				Maximum number of pulse inputs	50 k/sec	
			Counts mode	Spans	50, 500, 5000, 50 k, 500 k, 5 M, 50 M, 500 M C/F.S.	
				Maximum number of pulse inputs	50 k/sampling interval	
			Inst. Mode	Spans	50, 500, 5000, 50 k, 500 k, 5 M, 50 M, 500 M C/F.S.	
				Maximum number of pulse inputs	50 k/sampling interval	
	Trigger input	Number of channels		1 ch		
	Specifications of each input section	Maximum input voltage		24 V		
		Threshold voltage		Approx. 2.5 V		
		Hysteresis range		Approx. 0.5 V (2.5 to 3 V)		
	Alarm output	Number of channels		4 ch		
		Output format		Open collector output (pull-up resistance: 10 kΩ) 5 to 24 VDC, up to 100 mA		
		Output conditions		Level judgment, window judgment, logic pattern judgment, pulse judgment		

Main unit specifications				ZR-RX40A
External Input/ Output Sections	PC I/F	Interface types		Ethernet (10BASE-T/100BASE-TX) USB (2.0)
		Functions	Software functions	Data transfer to the PC (realtime memory) PC control of the ZR-RX40
			Ethernet functions	Web server function (Operation of ZR-RX40, Displays ZR-RX40's screen image on browser) FTP function (Transfers and deletes measured data from internal memory via network)
			USB functions	USB drive mode (Transfers and deletes measured data from internal memory)
		Realtime data transfer speed (*5)		100 ms/10 ch max.
Sampling interval				100, 200, 500 ms; 1, 2, 5, 10, 20, 30 s; 1, 2, 5, 10, 20, 30 min; 1 h Max: 100 ms/10 ch
Monitor	Display			5.7-inch TFT color LCD (QVGA: 320 x 240 dots)
Internal memory devices	Internal memory			Approx. 12 MB
Clock accuracy (*6)				±0.002 % (approx. 50 sec/month)
Operating environment				0 to 45 °C, 5 to 85 % RH (15 to 40 °C when the battery is used)
Withstand voltage				350 Vp-p (between each input channel/GND; between each input terminal) 1 minute
Power supply				AC adapter: 100 to 240 VAC/50 to 60 Hz (*9) DC input: 8.5 to 24 VDC Battery pack (ZR-XRB1) (*7) two batteries can be mounted
Power consumption				28 VA or less (when the AC adapter is used)
Vibration resistance				Equivalent to automobile parts Type 1 Category A classification
External dimensions				232 x 152 x 50 mm
Weight				Approx. 990 g (*8)

*1 When ZR-XRH1 (Option) is used
*2 Features under the following measurement parameters
- Operating environment 23 °C ±3 °C
- Left for at least 30 minutes after the power supply is turned on
- Sampling interval 1 s (20 ch)
- Filter ON (Average: 10 times)
- GND connection
- Thermocouple used is T: 0.32∅, other: 0.65∅

*3 Refer to the ZR-XRH1 (Option) specifications for humidity measurement accuracy.
*4 Switch between logic and pulse input
*5 Differs according to the number of transfer channels
*6 When used at 23 °C
*7 ZR-XRB1 is an option
*8 Excluding the battery and AC adapter
*9 Be sure to use only the AC cable and the AC adapter provided as standard accessories.

External Dimensions

(Unit: mm)

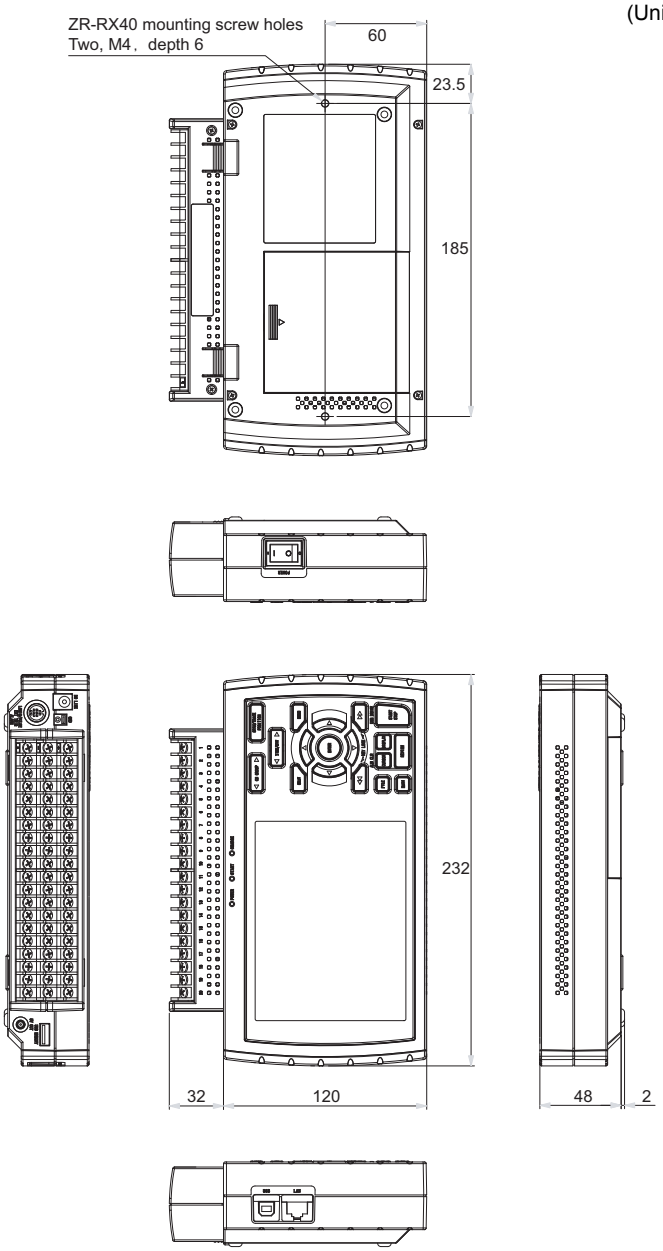

MEMO

MEMO

Revision History

A manual revision code appears as a suffix to the catalog number at the bottom of the front and back covers of this manual.

Cat. No. Z259-E1-03

↑

Revision code

Revision code	Date	Revised contents
01	April 2007	Original production
02	August 2007	Rear view added in External Dimensions and minor corrections
03	October 2007	Notice on EMC Directive added and minor corrections.

OMRON Corporation
Industrial Automation Company

Application Sensors Division
Sensing Devices and Components Division H.Q.
Shiokoji Horikawa, Shimogyo-ku,
Kyoto, 600-8530 Japan
Tel: (81)75-344-7068/Fax: (81)75-344-7107

Regional Headquarters
OMRON EUROPE B.V.
Sensor Business Unit,
Carl-Benz-Str. 4, D-71154 Nufringen,
Germany
Tel: (49)7032-811-0/Fax: (49)7032-811-199

OMRON ELECTRONICS LLC
One Commerce Drive Schaumburg
IL 60173-5302 U.S.A.
Tel: (1) 847-843-7900/Fax: (1) 847-843-7787

OMRON ASIA PACIFIC PTE. LTD.
No. 438A Alexandra Road # 05-05/08 (Lobby 2),
Alexandra Technopark,
Singapore 119967
Tel: (65) 6835-3011/Fax: (65) 6835-2711

OMRON (CHINA) CO., LTD.
Room 2211, Bank of China Tower,
200 Yin Cheng Zhong Road,
Pu Dong New Area, Shanghai,
200120, China
Tel: (86)10-8391-3005/Fax: (86)10-8391-3688

Authorized Distributor:

Cat. No. Z259-E1-03

Printed in Japan.
1007-0.1M (0407)